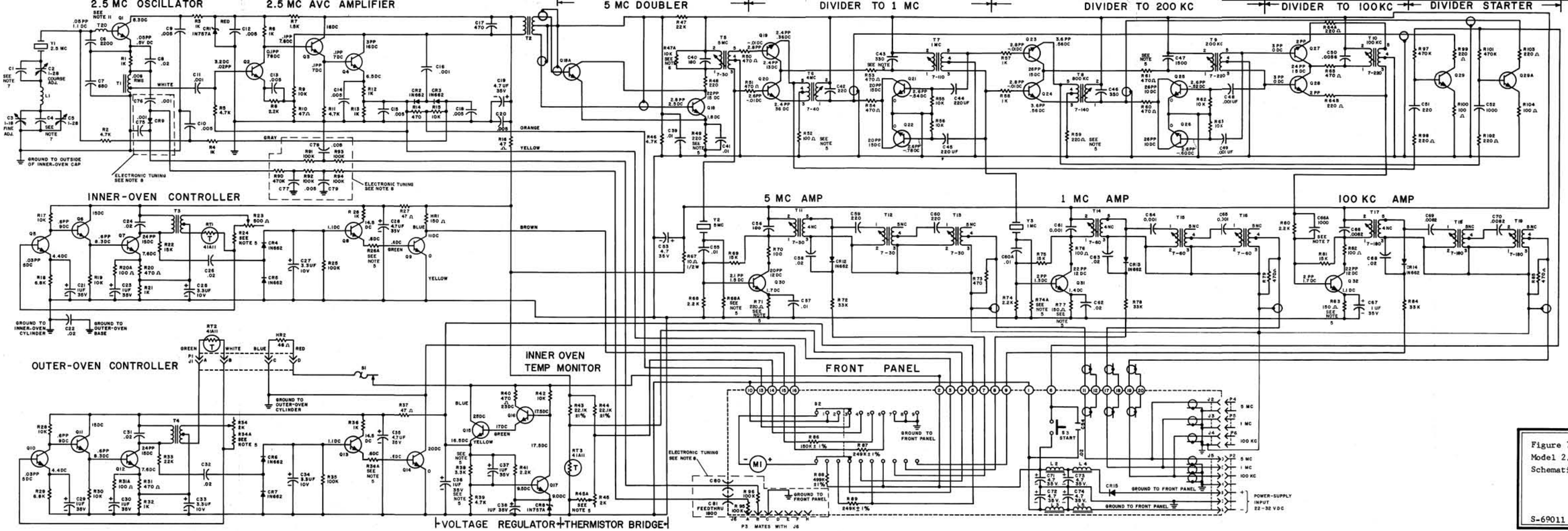

Figure 7-1. Frequency Standard, Model 2.5B and Model 2.5C Schematic Diagram S-69000 Rev -

S-69011 7-3/7-4